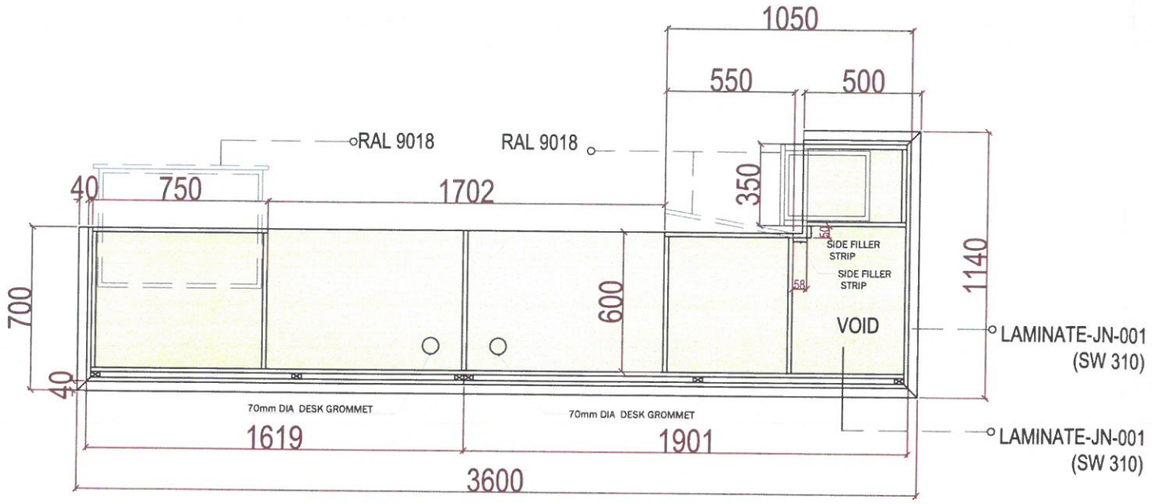

TOP VIEW-RECEPTION COUNTER

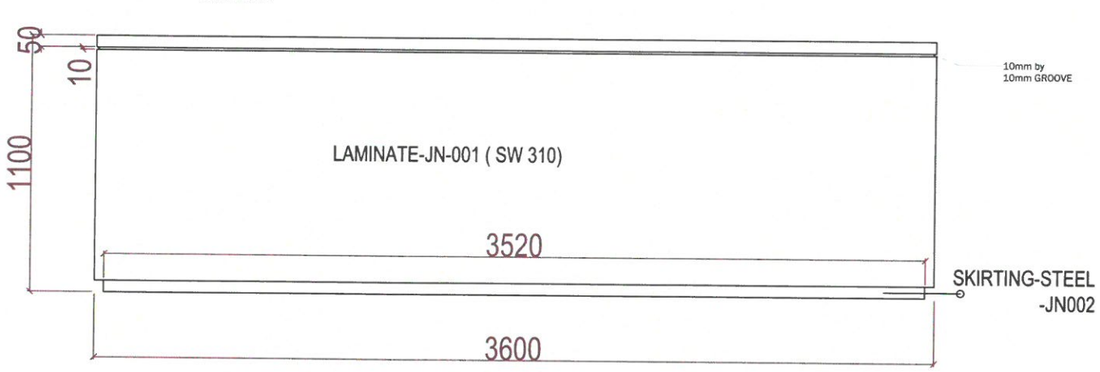

FRONT VIEW-RECEPTION COUNTER

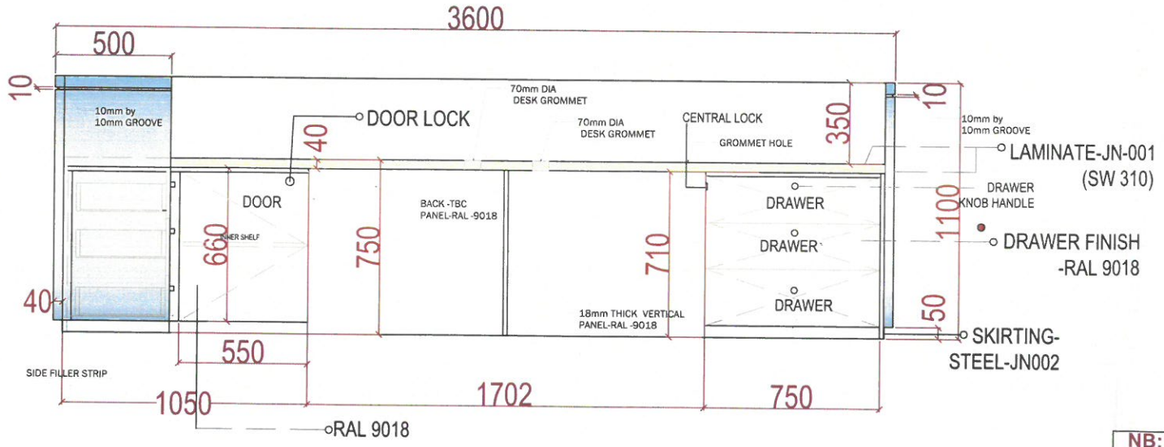

BACK VIEW-RECEPTION COUNTER

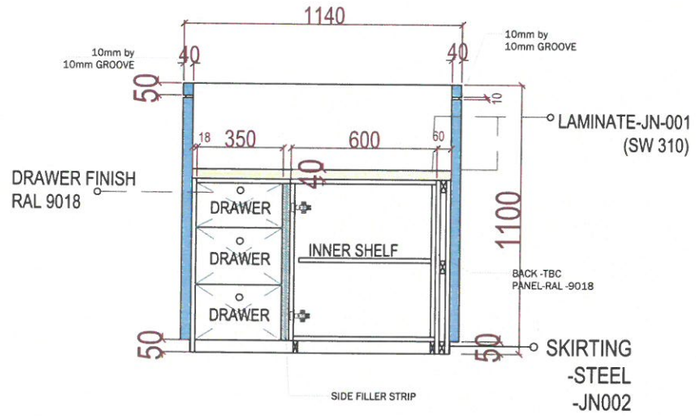

SIDE VIEW

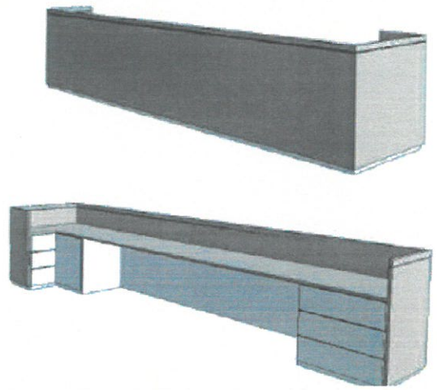

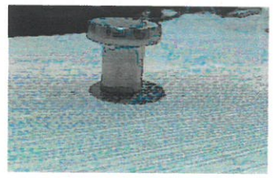

SAMPLE-IMAGE
KNOB HANDLE

SAMPLE-IMAGE
SW-310

SAMPLE-IMAGE
DESK GROMMET

SAMPLE-IMAGE
RAL-9018

NB:

1-ALL DOORS AND DRAWER TO HAVE SOFT CLOSE MECHANISM

2- SOCKETS WITH RED COLORED COVER PLATE ARE SOLAR POWERED

WOODstyles

IFC

www.wood-styles.com

Copyright of designs shown herein is retained by this office. Authority is required for any reproduction.
© Copyright Wood-styles Ltd.

Nigeria, Lagos +234 80 9037 9888
Email: info@wood-styles.com

Project

PUNUKA

NG-Lagos-ILEKKI

Owner

LEGEND

Date	Description
15/04/2025	FOR APPROVAL
23/04/2025	REVISION ONE
25/04/2025	REVISION TWO
30/04/2025	REVISION THREE
06/05/2025	REVISION FOUR
14/05/2025	REVISION FIVE

For Approval

Project No. : ##-###-###
Scale : A3 = ####
Drawn by : P.Ibe
Checked : Samir Barder
Cad File : CAD File

Sheet title

CLADDING
Shop Drawing

GROUND FLOOR

Dwg No. No.

WS-DS-SD-PU-004 5

SHEET N0. 5